先导式溢流阀（滑阀型） Pilot Relief Valves (Slide Valve Type)
型号Model：JRP10-08

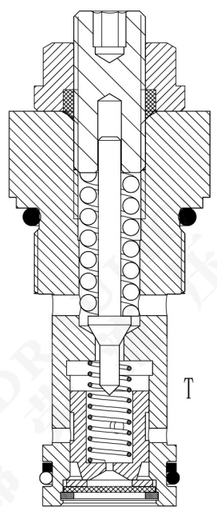

描述Description

螺纹插装快速响应先导式滑阀型溢流阀用于保护系统的压力瞬时过载，快速成启闭仍能保持系统平稳性。

Threaded plug-in quick response pilot slide valve is used to protect the system from instantaneous pressure overload, and it can keep the stability of the system when it opens and closes quickly.

工作原理Operation

当P口压力未达到弹簧设定压力的90%时，P到T不通，超过90%并压力继续升高时，P到T开始溢流，至弹簧的最高设定压力。

When the pressure at the P-port does not reach 90% of the set pressure of the spring, P-to-T is blocked; when it exceeds 90% and the pressure continues to rise, P-to-T begins to overflow to the highest set pressure of the spring.

特点Features

- 调节器确保弹簧不会被压实。
- 可选的可选压力范围达185bar（2683psi）。
- 阀芯和阀套硬质处理、耐用。
- 工业常规阀孔。

- The regulator ensures that the spring will not be compacted.
- Optional optional pressure range up to 185bar(2683psi).
- The valve core and valve sleeve are hard to handle and durable.
- Industrial conventional valve hole.

符号Symbol

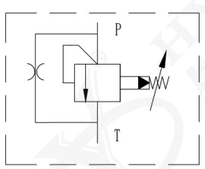

性能曲线Characteristic

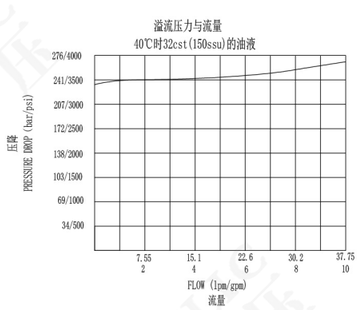

技术参数Specifications

最高工作压力：315bar（4568psi）
流量：参见性能曲线
开启压力定义：当流量达到公称流量的2.5%时的压力测量值bar
闭合压力：开启压力的90%
过滤精度：25μm
使用温度：-40℃～120℃（标准丁腈橡胶）
-26℃～204℃（氟橡胶）
介质：粘度介于7.4～420cSt（50-2000）ssu的矿物油或具有润滑作用的合成油
标准压力范围：130～315bar（1885～4568psi）

Max.Working Pressure:315bar（4568psi）
Flow:See performance curve.
Opening Pressure Definition:Pressure measurement when the flow reaches 2.5% of the nominal flow.
Clossing Pressure:90% of opening pressure
Filtering Accuracy:25μm.
Service Temperature:-40℃~120℃(NBR),-26℃~204℃(FKM)
Medium:Mineral oil with viscosity of 7.4 ~ 420 CST (50-2000) ssu or synthetic oil with lubricating function.
Standard Pressure Range:130 ~ 315bar (1885 ~ 4568psi)

安装尺寸Dimensions

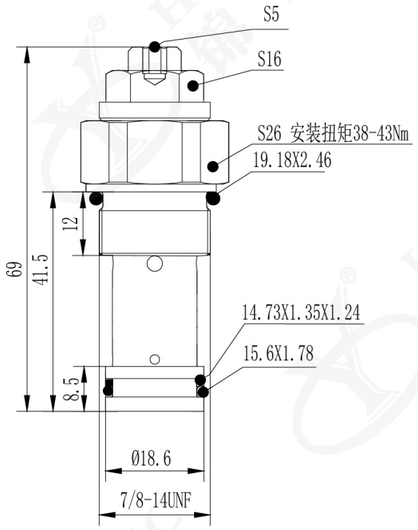

插孔Cavity

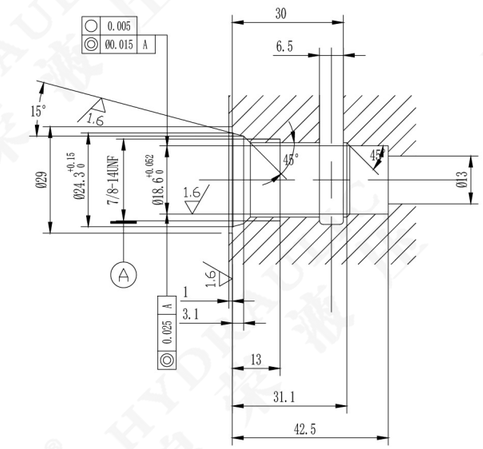

订购选型To Order

JRP10-08- ✱- ✱/ ✱✱✱- ✱

1 2 3 4 5

1 型号Model
JRP = 先导式溢流阀
Pilot Operated Pressure Relief Valves

2 调节选件Control
L = 螺杆Screw
C = 防调Anti-adjustment
K = 调扭Torque Adjustment
F = 六角头锁钮
Hexagon Lock Button
O = 螺杆封盖Screw Cap

3 弹簧调压范围Spring Ranges
A = 130～315bar
（1885～4568psi）

4 调定压力Setting In Bar
可调节或指定压力，例如：
190=190bar
170=170bar
The pressure can be adjusted or specified,Example:
190=190bar
170=170bar

5 密封件Seal Kits
N = 丁腈橡胶(NBR)
V = 氟橡胶(FKM)