电磁换向阀，两位三通，滑阀式
Solenoid Operated Valves, Two-Position Three-Way, Slide Valve Type
型号Model：JSD08-05

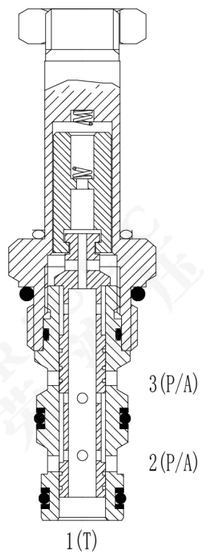

描述Description

电磁驱动、两位三通、滑阀式液压螺纹插装阀。

Electromagnetic drive, two-position three-way, slide valve type hydraulic threaded cartridge valve.

工作原理Operation

当电磁铁不通电时，1和2通，和3不通。

当电磁铁通电时，1和3通，和2不通。

When the electromagnet is not energized, 2 and 1 are connected, and 3 are not connected.
When the electromagnet is energized, 2 and 3 are connected, but 1 is not.

特点Features

- 额定电线圈适合连续工作。
- 可选线圈电压和终端。
- 可以对所有油口完全加压。
- 高效湿式衔铁结构。
- 阀芯和阀套硬质处理、耐用。
- 工业通用插孔。
- 结构紧凑

- Rated electric coils are suitable for continuous operation.
- Optional coil voltage and terminal.
- All oil ports can be fully pressurized.
- Efficient wet armature structure.
- The valve core and valve sleeve are hard to handle and durable.
- Industrial universal jack.
- Compact structure

符号Symbol

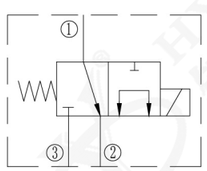

性能曲线Characteristic

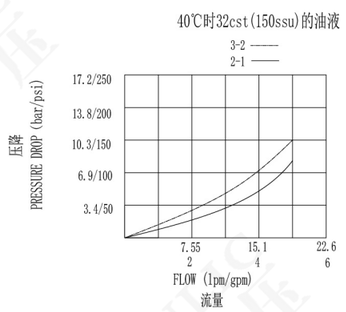

技术参数Specifications

最高工作压力：350bar（5075psi）
流量：参见性能曲线
内泄漏量：在210bar时，泄漏量≤80mL/min
工作电压：12VDC、24VDC、110VAC、220VAC
最小工作电压：正常电压85%
过滤精度：20μm
使用温度：-40℃～120℃（标准丁腈橡胶）
-26℃～204℃（氟橡胶）
介质：粘度介于7.4～420cSt（50-2000）ssu的矿物油或具有润滑作用的合成油

Max.Working Pressure:350bar（5075psi）
Flow:See performance curve.
Internal leakage:At 210bar, the leakage is ≤80mL/min.
Working Voltage: 12VDC, 24VDC, 110VAC, 220VAC.
Minimum Working Voltage: 85% of normal voltage.
Filtering Accuracy: 20μm.
Service Temperature:-40℃~120℃(NBR),-26℃~204℃(FKM)
Medium:Mineral oil with viscosity of 7.4 ~ 420 CST (50-2000) ssu or synthetic oil with lubricating function.

安装尺寸Dimensions

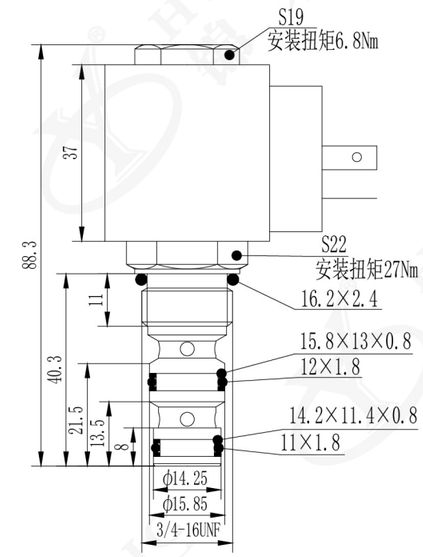

插孔Cavity

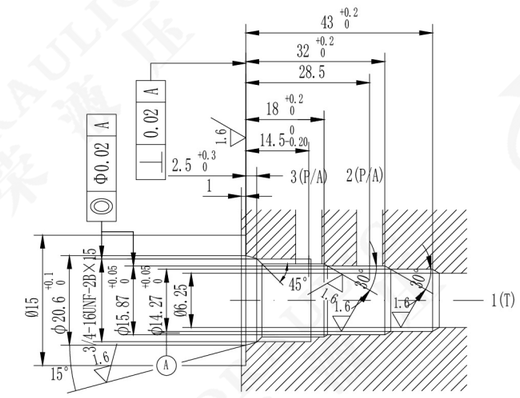

订购选型To Order

JSD08-05-＊＊＊-＊＊-＊

1 2 3 4

1 型号Model
JSD = 电磁换向阀
Solenoid Operated Valves

2 标准线圈电压Voltage
12 = 12VDC
24 = 24VDC
110 = 110VAC
220 = 220VAC

3 接线形式Coil Connection
DL = 双线Double lead
SL = 单线Sigle lead
HM = 三插Hirschmann
ER = 德意志插座（防水线圈）
Deutsch Connector(Water-proof Coil)

4 密封件Seal Kits
N = 丁腈橡胶(NBR)
V = 氟橡胶(FKM)