# 平衡阀 Counterbalance Cartridge Valves
## 型号Model：JBP20-01

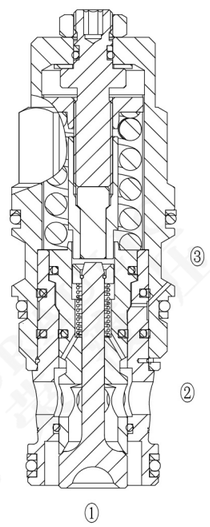


## 描述Description

螺纹插装式、三端口平衡阀，主要用于控制移动的负载，防止其工作时产生飞速，并且可以把负载锁定在任意位置，同时提供油液热涨溢流功能。

Threaded plug-in three-port balance valve is mainly used to control the moving load to prevent it from flying rapidly when working, and can lock the load at any position, and at the same time provide the function of oil thermal expansion and overflow.

## 工作原理Operation

此阀允许液流从②到①自由流动，同时阻止其反向流动，若先导口③压力按照比例增加，则①到②流量也按照比例增加。

This valve allows the liquid flow to flow freely from ② to ①, while preventing the reverse flow. If the pressure at the pilot port ③ increases in proportion, the flow from ① to ② will also increase in proportion.

## 特点Features

- 零件硬质处理、耐用。
- 压力变化响应快。
- 工业常规阀孔。

- The parts are hard to handle and durable.
- Fast response to pressure change.
- Industrial conventional valve hole.

## 符号Symbol

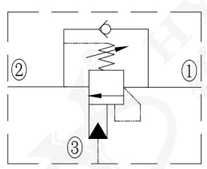


## 性能曲线Characteristic

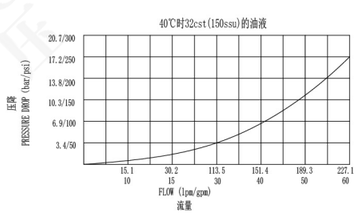


## 技术参数Specifications

最高工作压力：350bar（5075psi）
流量：参见性能曲线
内泄漏量：≤0.4mL/min
导压比例：4.5:1
特性：溢流压力设置为负载值（即工作压力）的1.3倍，②口不可承受全压，否则会影响设定压力
过滤精度：25μm
使用温度：-40℃～120℃（标准丁腈橡胶）
-26℃～204℃（氟橡胶）
介质：粘度介于7.4～420cSt（50-2000）ssu的矿物油或具有润滑作用的合成油
标准压力范围：140～350bar（2030～5075psi）

Max.Working Pressure:350bar（5075psi）
Flow:See performance curve.
Internal leakage:≤0.4mL/min
Pilot Ratio：4.5：1
Featuresf：The overflow pressure is set to 1.3 times the load value (i.e. the working pressure),② mouth can't bear the total pressure, otherwise it will affect the set pressure.
Filtering Accuracy:25μm.
Service Temperature:-40℃~120℃(NBR),-26℃~204℃(FKM)
Medium:Mineral oil with viscosity of 7.4 ~ 420 CST (50-2000) ssu or synthetic oil with lubricating function.
Standard Pressure Range:140～350bar（2030～5075psi）

## 安装尺寸Dimensions

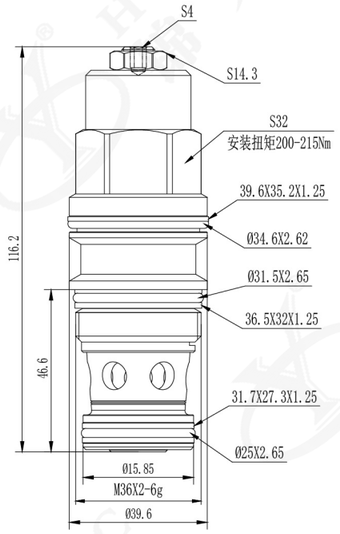


## 插孔Cavity

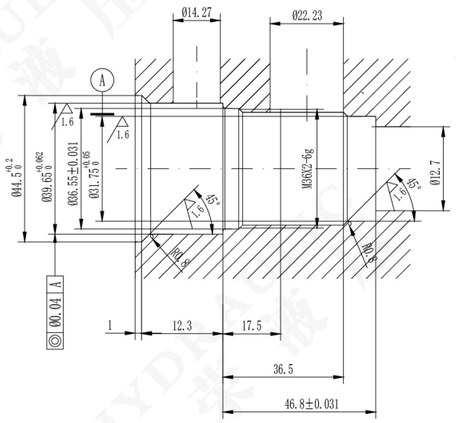


## 订购选型To Order

**JBP20-01- ✱ - ✱ - ✱ - ✱ / ✱✱✱ - ✱**

1 2 3 4 5 6 7

1 型号Model
JBP = 平衡阀
Counterbalance Cartridge Valves

2 流量Flow
A = 240L/min

3 导压比Pilot Ratio
A = 4.5:1

4 调节选件Control
L = 螺杆Screw
C = 防调Anti-adjustment
K = 调扭Torque Adjustment
F = 六角头锁钮Hexagon Lock Button
O = 螺杆封盖Screw Cap

5 弹簧调压范围Spring Ranges
A = 140～350bar（2030～5075psi）

6 调定压力Setting In Bar
可调节或指定压力，例如：190=190bar，170=170bar
The pressure can be adjusted or specified,Example: 190=190bar,170=170bar

7 密封件Seal Kits
N = 丁腈橡胶(NBR)
V = 氟橡胶(FKM)